※※コノ部品ノ構成個数ヲ記入 NUMBERS REQUIRED ON THIS DRAWING　※改正記号ハ部品区分材料表ニヨル最新ノモノニヨルコト SEE THE PARTS LIST FOR THE LATEST DWG. NO.　補用対象部品ニハ『1』ヲ付与スル FILL "1" FOR SPARE PARTS

部番 ITEM	品番 NO.	部品管理記号 ITEM MARK	※図面番号 DWG. NO.	※※一式分個数 QUANT.	名称 PART NAME	材質 MATERIAL	記事 REMARK	CCM	補用
1	／	F	本図ニヨル THIS DWG	1	据付説明書（裏）（英語） INSTALLATION MANUAL(BACK SIDE)	再生上質紙 WOOD FREE PAPER	55kg/連 55kg/REAM	2	

En. 英

❹ ELECTRIC WIRING

① First, wire between the indoor and outdoor units, and then to the separate power sources, and finally between the indoor units and the remote controllers. Then, check if they operate properly.
(If wiring for group control by remote controller, check crosswires.)
For details, see the installation manual of the indoor and outdoor units.

② Next, wire between outside units such as the central control monitor, etc. and make the necessary settings.
For details, see Wiring to outside units (central control monitor) .

Wiring to indoor units

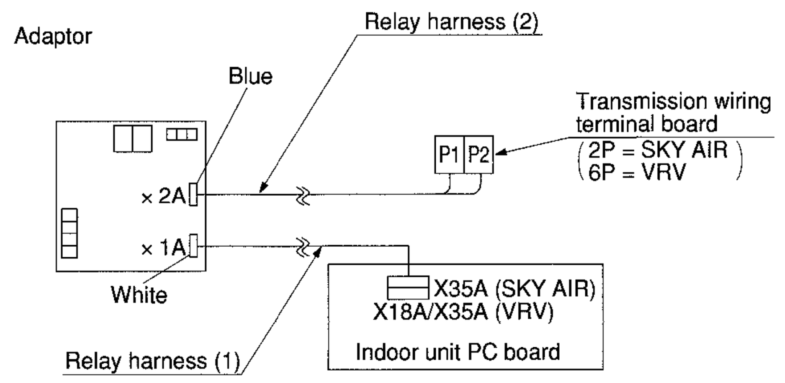

Make connections as shown above, using the attached relay harnesses (1) and (2).

- Connect relay harness (1) to the connector (X35A or X18A) on the indoor unit PC board.
- Relay harness (2) has no polarity. Connect it to terminals P1 and P2 on the transmission wiring terminal board inside the indoor unit Electric parts box.

Wiring to outside units (central control monitor)

1. Remote control input (operation control)

Wire as described below. Wiring differs depending on whether using a voltage or no-voltage input.

For voltage input

Set the changeover switch (SS1) to "VOLT". (Factory set : VOLT)

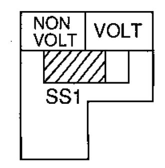

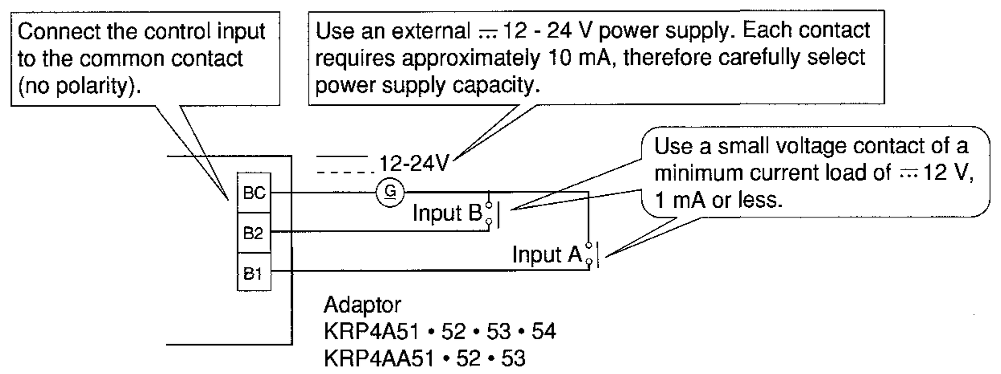

For NON VOLT input

Set the changeover switch (SS1) to "NON VOLT".

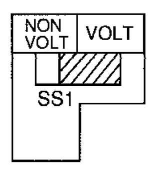

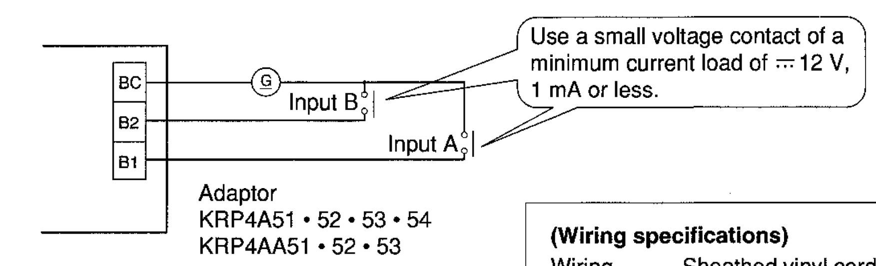

(Wiring specifications)
Wiring … Sheathed vinyl cord or cable
Gauge … 0.18 ~ 1.25 mm²
Length … Max. 150 m

⟨NOTE⟩
Keep transmission wiring away from power supply wiring to avoid malfunctions.

2. Setting the control mode selector switch (RS1)

Using the control mode selector switch (RS1), select the control mode as described below.

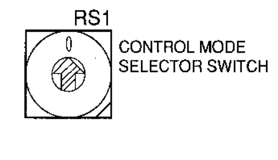

(Factory set)
"0" position

① For specifying individual display

Position	Function
0	Individual display (input ignored)

② When operating the unit with constant input at input A

Position	Function	When input A is ON	When input A is OFF
1	ON/OFF control impossible by remote controller	Operation (normally ON/OFF control impossible by remote controller)	OFF + ON/OFF control impossible by remote controller
2	Centralized	Operation + ON/OFF control possible by remote controller	
3	OFF control possible by remote controller	Operation + OFF control possible by remote controller (ON control impossible by remote controller)	
4	ON/OFF control possible by remote controller	ON/OFF control possible by remote controller (Operation impossible by optional controller)	

⟨Note⟩

- Input B is for forced ON/OFF input. When input B is ON, OFF control is possible but ON/OFF control by the remote controller is impossible, and input A is igored. When it is OFF, input A is ignored even if selected. It is necessary to reselect input A.

③ When operating the unit using instantaneous input at input A
(Use a instantaneous input of 200 msec or longer ON time.)

Position	Function	Input A	Input B capacity
5	ON/OFF control impossible by remote controller	Turns OFF system with On input Turns ON system with ON input	Input B is for forced OFF input (when ON, OFF control is possible but ON/OFF control by remote controller is impossible, and input A is ignored).
6	Individual	Turns OFF system with ON input Turns ON system with ON input (Normally ON/OFF control possible by remote controller)	

★ For thermostat control using input B

Position	When input A is ON	When input B is ON
C	ON/OFF control impossible by remote controller (Same as position 5)	Forced thermostat OFF command
D		Energy saving command (✻)
E	Individual (Same as position 6)	Forced thermostat OFF command
F		Energy saving command (✻)

- Forced thermostat OFF command
  Indoor unit fan only operates.
- Energy saving command (✻)
  The indoor unit operates at 2°C higher (cooling)/lower(heating) the set temperature.

⟨Notes⟩

- In such case, even if input A is ON, thermostat control is turned OFF, and all units in the same group will stop.

(✻) With Sky Air units, the forced thermostat OFF command is generated even when position D and F are selected.

④ When operating the unit using instantaneous input at input A and B
(Use an instantaneous input of 200 msec or longer ON time).

Position	Function	When input A is ON	When input A is OFF
7	ON/OFF control impossible by remote controller	Operation (normally ON/OFF control impossible by remote controller)	OFF + ON/OFF control impossible by remote controller
8	Centralized	Operation + ON/OFF control possible by remote controller	
9	OFF control possible by remote controller	Operation + OFF control possible by remote controller (ON control impossible by remote controller)	
A	ON/OFF control possible by remote controller	ON/OFF control possible by remote controller (Operation impossible by optional controller)	
B	Individual	Operation (normally ON/OFF control possible by remote controller)	OFF (normally ON/OFF control possible by remote controller)

⟨Notes⟩

- When set to position 7-A, and using the constant mode for input B, forced stop capacity is enabled (input A is ignored).
- At position B, the constant mode for input B is not used.

3. Temperature setting input

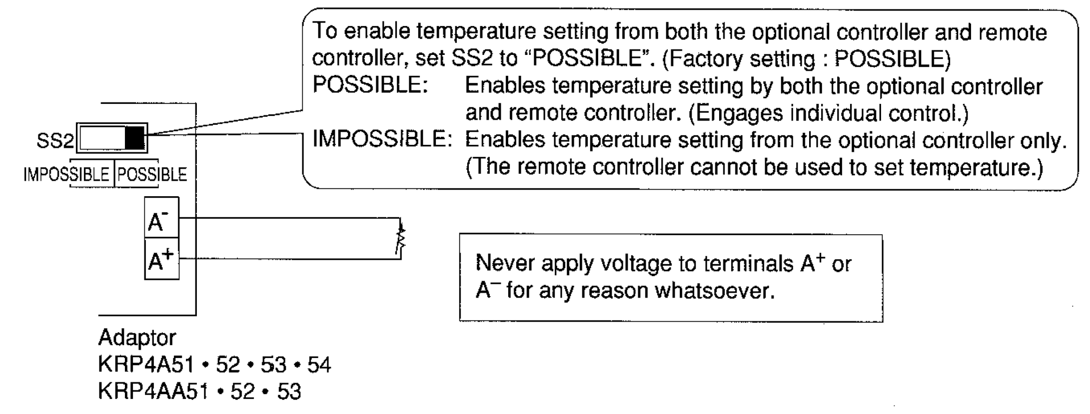

Temperature setting corresponds to resistance values in the range of 0 to 135Ω as shown below.

Temperature setting (˚C)	16	17	18	19	20	21	22	23	24
Resistance (Ω)	0.0 ~ 3.4	5.0 ~ 11.6	13.8 ~ 20.0	22.4 ~ 28.4	31.0 ~ 36.4	39.4 ~ 44.8	48.2 ~ 52.8	56.6 ~ 61.2	65.2 ~ 69.4

Temperature setting (˚C)	25	26	27	28	29	30	31	32
Resistance (Ω)	73.8 ~ 77.8	82.4 ~ 85.8	91.0 ~ 94.0	99.4 ~ 102.2	108.6 ~ 110.4	117.2 ~ 119.2	125.8 ~ 127.4	134.2 ~ 140.0

⟨Note⟩ Line resistance included in above figures.

(Wiring specifications)
Wiring … Sheathed vinyl cord
Gauge … 1.25 ~ 2.00 mm²
Length … Max. 70 m

⟨NOTE⟩
Keep transmission wiring away from power supply wiring to avoid malfunctions.

4. Cancelling display signals

Operation output terminals (W1 and W2) and error output terminals (W3 and W4) are no-voltage normally constant contacts.

(Allowed electric current per contact is between 10 mA and 3 A.)

Normal operation output (Ry1)
ON when the indoor unit is operating normally.

Error output (Ry2)
ON when the indoor unit stops because of malfunction or when a transmission error occurs between the adaptor and the indoor unit.

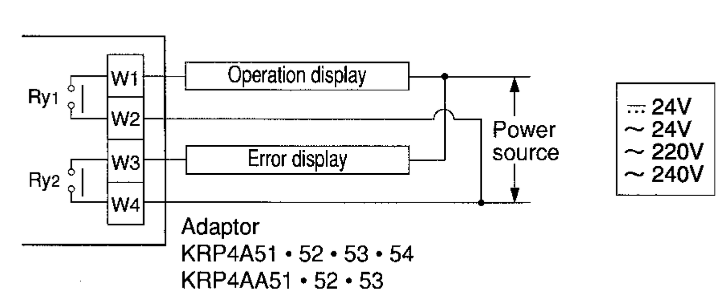

⟨ NOTE ⟩
If using a 220 or 240 V power supply, keep transmission wires away from incoming power supply wiring.

Display output is as described below.

Output	Both Ry1 and Ry2 OFF	Only Ry1 ON	Only Ry2 ON
Display	OFF	Normal operation	System stopped due to malfuction or transmission error generated between adaptor and indoor unit

1PA59890-1F

注）1．紙ノ大キサハ４２０×５９４（Ａ２サイズ）トスルコト。
2．文字及ビイラストハ、全テ黒色トスル。
3．字体及ビレイアウトハ本図ニ準ズルコト。
4．校正ノ段階デ版下ヲ提供シ、設計ノ確認ヲ得ルコト。
5．本図ハ１ＰＡ５９８８９－１ノ裏面ニ印刷スルコト。
6．ソノ他ノ特記外ハ、ＡＳ３０３００４（最新ノモノ）ニヨルコト。

NOTES) 1. SIZE OF PAPER : 420 × 594 (A2 SIZE)
2. USE BLACK COLOR FOR ALL OF LETTERS AND ILLUSTRATIONS.
3. SEE THIS DWG. TYPES AND LAYOUT.
4. OBTAIN APPROVAL OF BLOCK COPY FROM THE DESIGN DEPT. AT PROOF READING.
5. PRINT THIS DWG ON THE BACK SIDE OF THE INSTALLATION MANUAL SHOWN IN THE DWG NO. 1PA59889-1.
6. SEE AS303004 (LATEST) UNLESS OTHERWISE SPECIFED.

Secret（秘）　CAD/BOM　1PA59890F
第3角法 3RD ANGLE PROJECTION
適合規格欄 AS303004

冷媒圧ヲ受ケナイ部品	⓪
DP2.8	1
DP3.3	2
DP4.14	3
ソノ他圧力	9

共用先 設・区 配布
住・本部
汎・本部
セ・本部
圧・開発
登録DAPICS（コードニ○印ヲ記入）⓪・10・20・50・60・70
配布先 Ⓚ G・N・S・包 ⚠ⓀⒻ

部番 ITEM | 塗装箇所 PLACE | 塗装種別 PAINT | 素地 FOUND | 工程 PROCESS | 仕上色 COLOR | 艶 GLOSS | 塗装（マタハ備考）REMARK
指示ナキ箇所ノ公差 TOLERANCE NOT INDICATED AS303004

F BR082887 08/08/05 図面改正依頼ニヨル BY REQUEST TO CHANGE THE DRAWING 全面 C級 補用互：有・無 INTERCHANGEABILITY YES NO 江川 DS019
E BR082740 08/07/16 誤記訂正 CORRECTION OF ERRORS 1 D級 補用互：有・無 INTERCHANGEABILITY YES NO 伊勢田 MT010

KRP4A51
据付説明書（裏）（英語）
INSTALLATION MANUAL (BACK SIDE)(En.)
作図沿革 DESIGNED ORIGIN 1PA59590Cハ旧図トスル 試作・生産 TRIAL PRODUCTION
ダイキン工業株式会社 DAIKIN INDUSTRIES LTD 尺度 SCALE
承認 APPROVED 沢井 照査 CHECKED 平居 設計 DESIGNED 製図 DRAWN 岩本
作成日 DATE YR 97. MO 12. DA 5
部品コード PART CODE JA942500
1PA59890F